www.PapaCambridge.com

UNIVERSITY OF CAMBRIDGE INTERNATIONAL EXAMINATIONS
General Certificate of Education Ordinary Level

CANDIDATE NAME

CENTRE NUMBER

CANDIDATE NUMBER

CHEMISTRY **5070/04**

Paper 4 Alternative to Practical **October/November 2009**

1 hour

Candidates answer on the Question Paper.

No Additional Materials are required.

READ THESE INSTRUCTIONS FIRST

Write your Centre number, candidate number and name on all the work you hand in.
Write in dark blue or black pen.
You may use a soft pencil for any diagrams, graphs or rough working.
Do not use staples, paper clips, highlighters, glue or correction fluid.
DO **NOT** WRITE IN ANY BARCODES.

Answer **all** questions.
Write your answers in the spaces provided in the Question Paper.
At the end of the examination, fasten all your work securely together.
The number of marks is given in brackets [ ] at the end of each question or part question.

For Examiner's Use

This document consists of **19** printed pages and **1** blank page.

SPA (SHW 00121 12/07) T73991/3
© UCLES 2009

UNIVERSITY of CAMBRIDGE International Examinations

[Turn over

www.PapaCambridge.com

1 Dry ammonia gas can be made in the laboratory using the apparatus shown below, by heating a solid mixture of calcium hydroxide, $Ca(OH)_2$ and ammonium chloride, NH_4Cl.

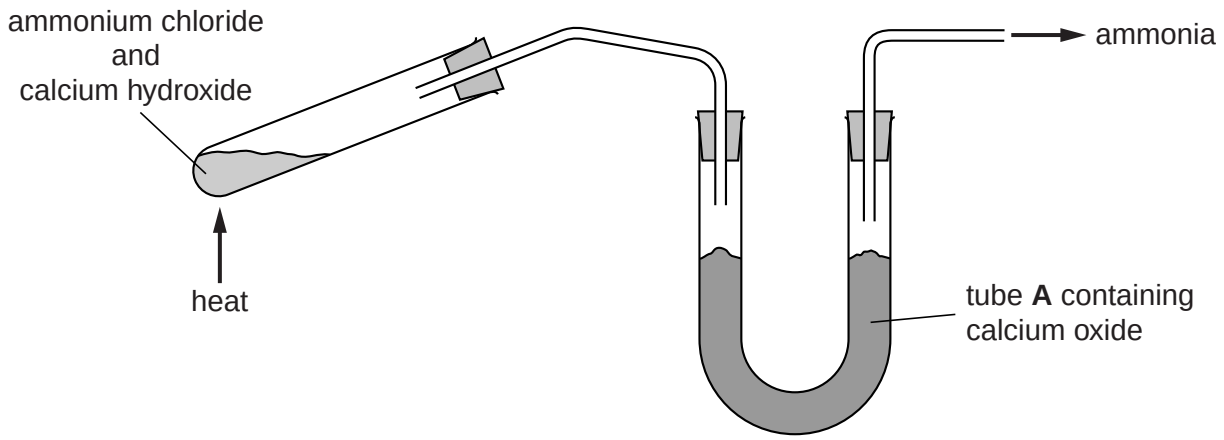

The equation for the reaction is

$$Ca(OH)_2 + 2NH_4Cl \longrightarrow CaCl_2 + 2H_2O + 2NH_3$$

(a) By referring to the equation suggest why tube **A**, which contains calcium oxide, is included in the apparatus.

..... [1]

www.PapaCambridge.com

(b) Which method, **X**, **Y** or **Z**, is most suitable for collecting ammonia?

Explain your answer.

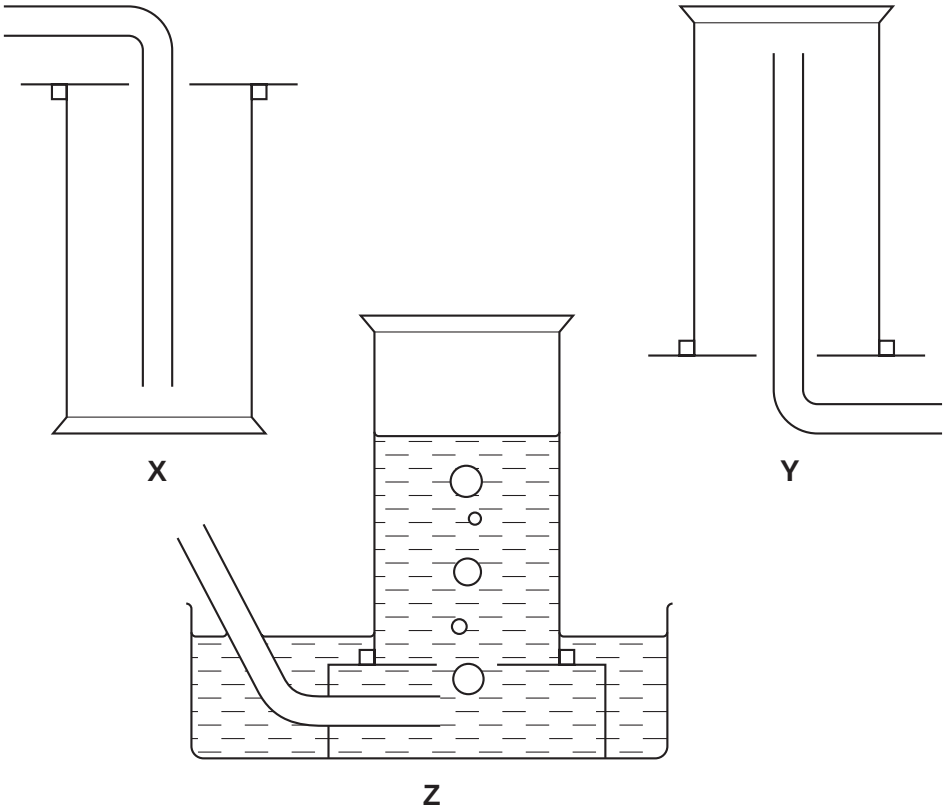

method of collection .....

explanation .....

..... [3]

www.PapaCambridge.com

(c) The fertiliser ammonium phosphate, $(NH_4)_3PO_4$, contains nitrogen, one of the essential elements for the growth of plants.

(i) Which other essential element is found in ammonium phosphate?

..... [1]

(ii) Given an aqueous solution of ammonium phosphate, describe a test to confirm the presence of the ammonium ion.

.....

.....

.....

..... [3]

(iii) Calculate the mass of nitrogen contained in 1 kg of ammonium phosphate.

[A_r: N,14; H,1; P,31; O,16]

..... g [2]

[Total: 10]

www.PapaCambridge.com

2 A student produced zinc oxide by heating zinc nitrate.

Some zinc nitrate was placed in a previously weighed crucible which was then reweighed.

mass of crucible + zinc nitrate = 11.79 g
mass of crucible = 9.90 g

(a) Calculate the mass of zinc nitrate.

..... g [1]

The solid zinc nitrate was heated in a fume cupboard. The following reaction took place.

$$2Zn(NO_3)_2(s) \rightarrow 2ZnO(s) + 4NO_2(g) + O_2(g)$$

(b) Describe the appearance of zinc oxide.

..... [1]

(c) Why was the heating done in a fume cupboard?

..... [1]

(d) Using your answer to **(a)** calculate the number of moles of zinc nitrate used in the reaction.

[A_r: Zn, 65; N, 14; O, 16]

..... moles [1]

www.PapaCambridge.com

(e) Using the equation for the reaction and your answer to **(d)** calculate the total volume of each gas produced from the reaction.

[1 mole of a gas occupies a volume of 24 dm^3 at room temperature and pressure.]

volume of NO_2 ..... cm^3

volume of O_2 ..... cm^3
[2]

(f) Name a compound that will react with zinc oxide to make zinc nitrate.

..... [1]

[Total: 7]

www.PapaCambridge.com

In questions **3** to **7** inclusive, place a tick (✓) in the box against the best answer.

3 On a bottle of which of the following substances would you expect this hazard warning sign to appear?

(a) aqueous ammonia ☐

(b) aqueous sodium chloride ☐

(c) ethanol ☐

(d) hydrochloric acid ☐

[Total: 1]

www.PapaCambridge.com

4 A student made four esters by reacting different alcohols and carboxylic acids together, as shown in the table below.

ester	alcohol	carboxylic acid
P	methanol	butanoic acid
Q	ethanol	methanoic acid
R	propanol	ethanoic acid
S	butanol	propanoic acid

Which two esters have the same relative molecular mass?

(a) **P** and **Q** ☐

(b) **R** and **S** ☐

(c) **P** and **R** ☐

(d) **Q** and **S** ☐

[Total: 1]

5 A student made oxygen by adding hydrogen peroxide to a weighed sample of powdered manganese(IV) oxide, which acts as a catalyst.

Which of the following graphs represents how the mass of manganese(IV) oxide varied as the experiment proceeded?

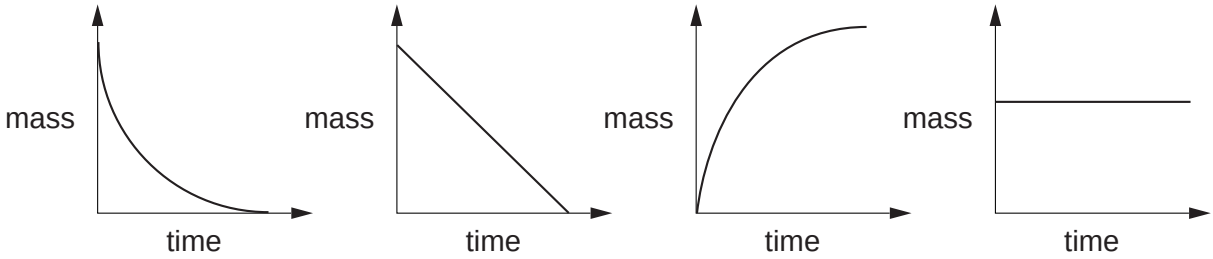

☐ **(a)** ☐ **(b)** ☐ **(c)** ☐ **(d)**

[Total: 1]

www.PapaCambridge.com

6 A student did three experiments in which equal volumes of hydrochloric acid were added to equal masses (an excess) of calcium carbonate. The gas produced was collected in a syringe and the volume of gas recorded at one minute intervals.

The results were used to plot the graphs shown below.

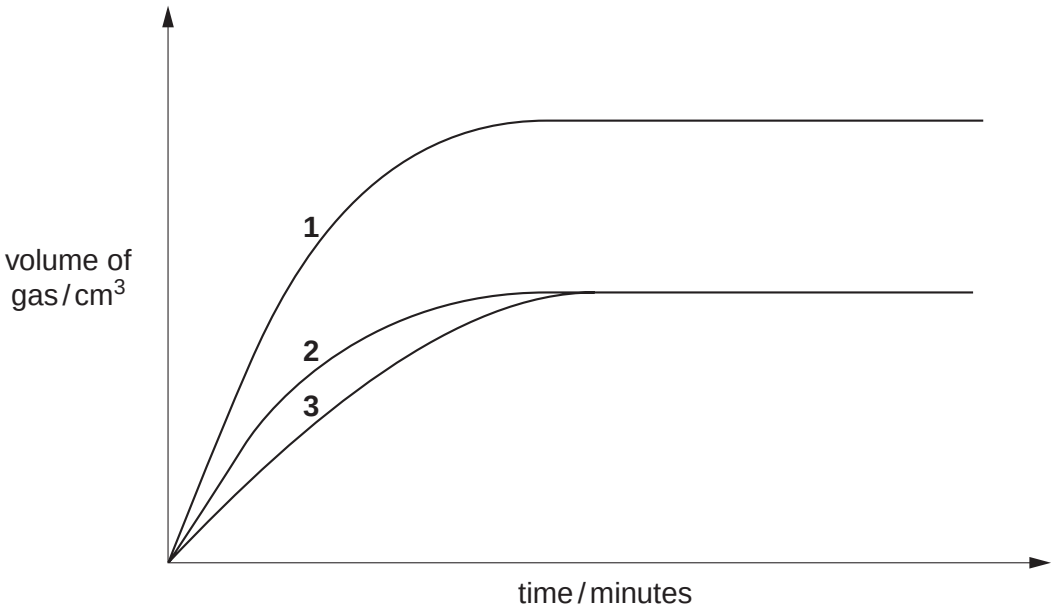

Which statement is correct?

(a) In experiment **1** the number of moles of acid was less than in experiment **2**. ☐

(b) In experiment **3** the calcium carbonate was more finely powdered than in experiment **1**. ☐

(c) In experiments **2** and **3** the number of moles of acid was the same. ☐

(d) In experiment **3** the concentration of the acid was higher than in experiment **2**. ☐

[Total: 1]

www.PapaCambridge.com

7 Two experiments were done using the cell shown in the diagram below.

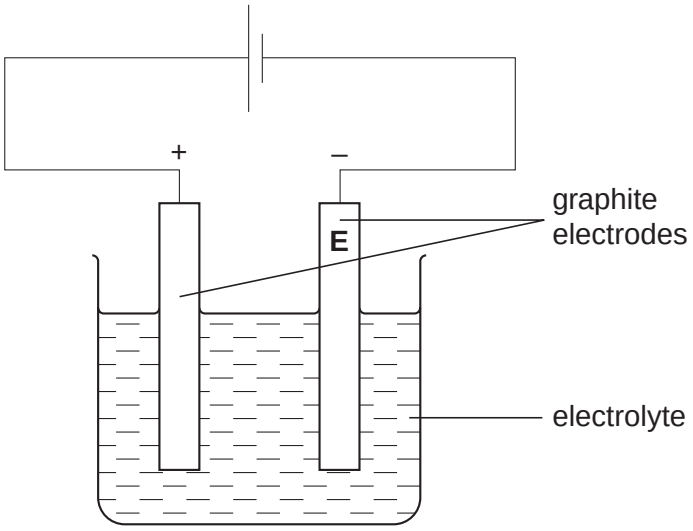

In experiment **1** the electrolyte was molten sodium chloride and in experiment **2** it was concentrated aqueous sodium chloride.

What were the products at the electrode labelled **E**?

	experiment **1** molten sodium chloride	experiment **2** concentrated aqueous sodium chloride	
(a)	chlorine	oxygen	☐
(b)	sodium	hydrogen	☐
(c)	chlorine	hydrogen	☐
(d)	sodium	oxygen	☐
(e)	sodium	chlorine	☐

[Total: 1]

www.PapaCambridge.com

8 A student was given a sample of a carbonate, $\mathbf{M}_2CO_3$, where **M** is a metal. He was asked to determine the relative atomic mass of **M** and to suggest its identity.

A sample of the carbonate was added to a previously weighed container which was then reweighed.

mass of container + $\mathbf{M}_2CO_3$ = 5.12 g
mass of container = 3.42 g

(a) Calculate the mass of $\mathbf{M}_2CO_3$.

..... g [1]

The sample was placed in a volumetric flask and 50.0 cm^3 of 1.00 mol / dm^3 hydrochloric acid (an excess) was added. A gas was produced.

(b) Name the gas and give a test to confirm its presence.

gas .....

test ..... [2]

When the reaction had finished, the solution was made up to 250 cm^3 with distilled water. This was solution **G**.
Using a pipette, 25.0 cm^3 of **G** was transferred to a conical flask and a few drops of methyl orange indicator were added.
A burette was filled with 0.100 mol / dm^3 aqueous sodium hydroxide. Aqueous sodium hydroxide was run into the titration flask until the end-point was reached.

(c) What was the colour change of the methyl orange during the titration?

The colour changed from ..... to ..... [1]

www.PapaCambridge.com

Three titrations were done. The diagrams below show parts of the burette with the liquid levels at the beginning and end of each titration.

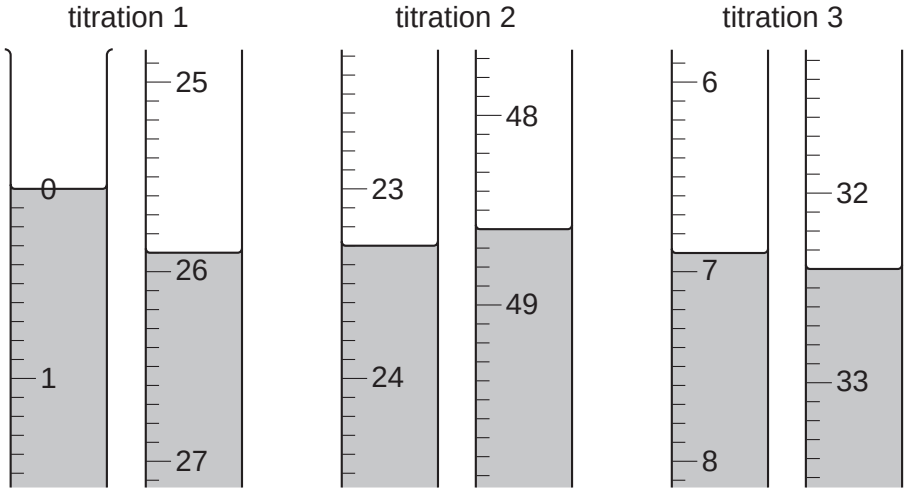

(d) Use the diagrams to complete the following table.

titration number	1	2	3
final burette reading / cm^3			
initial burette reading / cm^3			
volume of 0.100 mol / dm^3 sodium hydroxide / cm^3			
best titration results (✓)			

Summary:

Tick (✓) the best titration results.

Using these results, the average volume of 0.100 mol / dm^3

sodium hydroxide was ..... cm^3. [4]

(e) Calculate the number of moles of sodium hydroxide in the average volume of 0.100 mol / dm^3 sodium hydroxide in **(d)**.

..... moles [1]

www.PapaCambridge.com

(f) Using the equation, calculate the number of moles of hydrochloric acid in 25.0 cm[illegible] of **G**.

$$NaOH + HCl \rightarrow NaCl + H_2O$$

..... moles [1]

(g) Calculate the number of moles of hydrochloric acid in 250 cm^3 of **G**.

..... moles [1]

(h) Calculate the number of moles of hydrochloric acid contained in the original 50.0 cm^3 of 1.00 mol / dm^3 hydrochloric acid.

..... moles [1]

(i) By subtracting your answer in **(g)** from your answer in **(h)**, calculate the number of moles of hydrochloric acid that reacted with the sample of $\mathbf{M}_2CO_3$.

..... moles [1]

(j) Using the equation, calculate the number of moles of $\mathbf{M}_2CO_3$ that reacted with the number of moles of hydrochloric acid in your answer **(i)**.

$$\mathbf{M}_2CO_3 + 2HCl \rightarrow \mathbf{M}Cl_2 + CO_2 + H_2O$$

..... moles [1]

www.PapaCambridge.com

(k) Using your answers in **(a)** and **(j)** calculate the relative formula mass of $\mathbf{M}_2CO_3$ and hence the relative atomic mass of **M**.

[A_r: C,12; O,16]

relative formula mass of $\mathbf{M}_2CO_3$ .....

relative atomic mass of **M** is .....
[2]

(l) Given that the relative atomic mass of sodium is 23 suggest the identity of **M**, giving a reason for your choice.

M is .....

Reason ..... [2]

[Total: 18]

www.PapaCambridge.com

9 The following table shows the tests a student did on compound **C**. Complete the table by giving the conclusions to tests **(a)**, **(b)** and **(c)**, stating the observations in tests **(b)(ii)** and **(c)(ii)** and suggesting both the test and observation that led to the conclusion in test **(d)**.

test	observation	conclusion
(a) **C** was dissolved in water and the solution was divided into three parts.	A coloured solution was produced.	
(b) **(i)** To the first part, aqueous sodium hydroxide was added until a change was seen. **(ii)** An excess of aqueous sodium hydroxide was added to the mixture from **(i)**.	A red-brown precipitate was produced.	
(c) **(i)** To the second part aqueous ammonia was added until a change was seen. **(ii)** An excess of aqueous ammonia was added to the mixture from **(i)**.	A red brown precipitate was produced.	
(d)		**C** contains NO_3^- ions.

Conclusion: the formula of compound **C** is .....

[Total: 8]

www.PapaCambridge.com

10 When alcohols burn they give out heat. A student used the apparatus below to investigate the amount of heat produced when propanol was burnt.

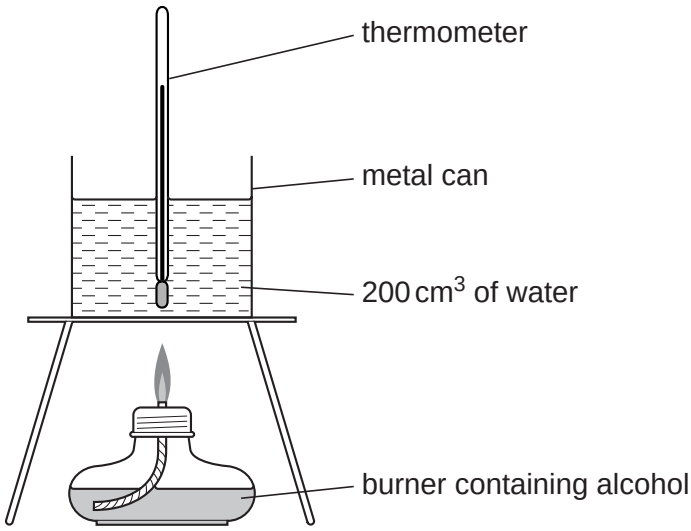

Some propanol was put into the burner which was then weighed.
The temperature of the water was noted.
The burner was lit and allowed to burn for several minutes.
The flame was extinguished and the final temperature of the water was noted. The burner was reweighed.

The diagrams below show parts of the thermometer stem for each of the temperature readings.

initial temperature

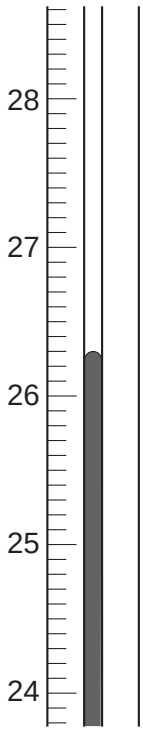

final temperature

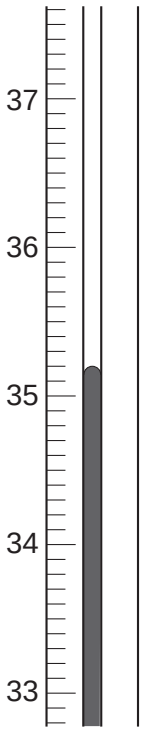

www.PapaCambridge.com

(a) Use the weighings and the thermometer readings to complete the following tables.

(i) initial mass of burner + propanol = 70.12 g

final mass of burner + propanol = 69.87 g

mass of propanol burnt = ... g

(ii) final temperature of water = ... °C

initial temperature of water = ... °C

rise in temperature = ... °C

[3]

(b) **(i)** Calculate the relative molecular mass of propanol, C_3H_7OH.

[A_r: H,1; C,12; O,16]

..... [1]

(ii) Using your answers to **(a)(i)** and **(b)(i)**, calculate the number of moles of propanol burnt.

..... moles [1]

(iii) Using your answers to **(a)(ii)** and **(b)(ii)**, calculate ΔH, the heat produced when one mole of propanol was burnt by using the formula:

$$\Delta H = \frac{-0.84 \times \text{rise in temperature}}{\text{number of moles of propanol burnt}} \text{ kJ/mol.}$$

..... kJ/mol [1]

www.PapaCambridge.com

(c) What general name is given to a reaction having a negative value of ΔH?

..... [1]

(d) A reference book gives the value of ΔH as –2010 kJ / mol.

Suggest **two** reasons why the value obtained in the experiment was less than this.

1. .....

2. ..... [2]

The experiment was repeated using four different alcohols. Each burner in turn was weighed and then the alcohol was allowed to burn until the temperature of the water had risen by 15 °C. The flame was then extinguished and the burner reweighed.

The following results were obtained.

alcohol	formula	mass of alcohol burned / g
methanol	CH_3OH	0.90
ethanol	C_2H_5OH	0.70
propanol	C_3H_7OH	0.62
pentanol	$C_5H_{11}OH$	0.57

www.PapaCambridge.com

(e) Plot the points on the grid below and draw a smooth curve through the points.

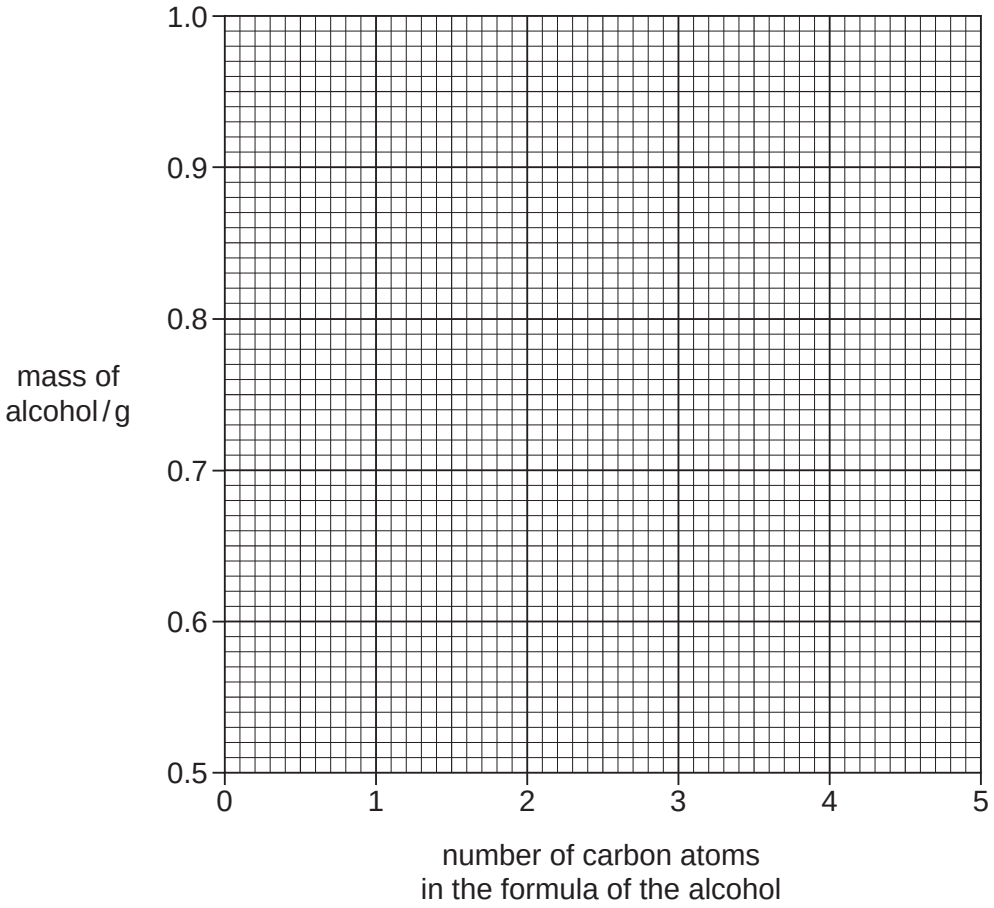

[2]

(f) Predict the mass of butanol, C_4H_9OH, which, on combustion, would raise the temperature of the water by 15 °C.

..... g [1]

[Total: 12]

BLANK PAGE

www.PapaCambridge.com

Permission to reproduce items where third-party owned material protected by copyright is included has been sought and cleared where possible. Every reasonable effort has been made by the publisher (UCLES) to trace copyright holders, but if any items requiring clearance have unwittingly been included, the publisher will be pleased to make amends at the earliest possible opportunity.

University of Cambridge International Examinations is part of the Cambridge Assessment Group. Cambridge Assessment is the brand name of University of